Against the grain
Windows & Doors

Windows & Doors
Installation & Maintenance Guide

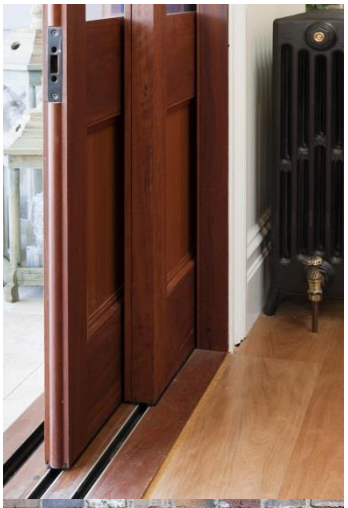

CONTENTS

INTRODUCTION

Thank you for purchasing your new timber windows and doors through Against the Grain Windows & Doors. This guide has been prepared to help you in the transportation, storage, installation and ongoing maintenance of your windows and doors to ensure they remain beautiful and functional for decades to come.

Timber windows and doors play a vital role in a building's environmental control, excluding water, providing ventilation, controlling air-infiltration and sound, and contributing to the building's thermal performance.

Timber windows and doors are ideal for all types of buildings and are designed and manufactured to produce accurately sized, performance-rated components. Being valuable joinery units, correct handling, storage and installation is essential if their potential is to be realised.

Installation needs to be done correctly to ensure the windows and doors perform as designed and the integrity and performance of the building fabric is maintained at the join between the joinery units and the rest of the envelope.

The finish to timber doors and windows contributes significantly to the building's architectural appearance and the unit's durability and service life. Good finishing practice avoids damage, maintains quality, ensures performance and saves money.

The choice of colour is important for durability as well as for visual appeal. Light coloured paints will last longer and give greater protection to the wood than dark coloured paints – and for dark coloured paints we only provide warranty if Accoya www.accoya.com has been used for manufacturing your windows and doors.

Timber windows and doors form a vital and expensive part of any building and they deserve regular maintenance. This increases their service life and enhances the building's amenity.

The bulk of this guide was taken from materials prepared by the Window and Door Industry Council Inc (WADIC) of which we are a member. Our association with this body ensures that we are kept up to date on all Australian Standards and codes and therefore that our windows and doors are fully compliant with those Standards and codes.

We hope this guide is of assistance.

If you have any further questions
please do not hesitate to contact us on
02 4782 3210

TRANSPORTATION

- The way timber windows and doors are handled and delivered to site can affect their long-term performance. Good practice avoids damage, maintains quality and saves money. Treat them like furniture.
- Prior to delivery prepare a well ventilated, clean storage area away from dust and traffic. Plan to place the windows and doors there immediately on delivery. Ensure the stored units will be safe from vandalism and theft.
- Units can be heavier than two people can safely carry. Allow for the available lifting capacity to match the unit's weight – ask for an estimate of the unit's weight before pickup and/or unloading.
- Sashes and leaves should be closed and locked before lifting. Units with removable sashes and leaves may have these removed to reduce weight for the purposes of lifting. These sashes and leaves must be re-fitted to the frame before final fixing of the window or door frame is done.
- Lift the units by the main frame.
- Carry them vertically. Do not lift by the sashes, leaves or handles.
- Restrain the units against A-Frame or the wall of the truck and pack between each unit. Avoid ropes bearing on the corners of the timber and protect edges with packing angles.
- If the windows and doors are being delivered to site by Against the Grain Windows & Doors, check the units when delivered. Ensure the units match the delivery docket and are undamaged. Report any problems immediately.

STORAGE

- Windows and doors are delivered with various finishes: with a first coat of primer or oil, unglazed for site glazing or fully glazed units. Each requires different quality of storage, generally the more finished the unit the more rigorous the protection required.

- Unfinished units should receive their first sealing coat within 48 hours of delivery to site (if not already applied during manufacture). This may be a preservative finish. If the units are to be built into brickwork or a wall to be rendered, they should be completely wrapped in cling plastic film after they receive a seal coat and before installation.

- Windows and doors should be stored on site for as short-a-time as possible. This reduces the chance of damage or changes to the timber's moisture content.

- Timber is hydroscopic. As it absorbs moisture to remain in equilibrium with its surrounding atmosphere and it expands slightly. As it loses moisture it shrinks slightly. The windows and doors are designed to accommodate this but they must be protected from moisture during storage. Finishes slow but do not prevent moisture movement.

- Ideally windows and doors should not be stored in a building under construction until wet trades are completed, and concrete, masonry and plaster are dry.

- Plan to store the delivered windows and doors immediately in a dry, well-ventilated location indoors, on level bearers at least 50mm off any concrete floor and away from dust or potential damage.

- Stack windows and doors in the sequence required with codes or identifying marks visible to avoid double handling.

- If windows and doors have to be stored outdoors, keep them clear off the ground on level bearers, protected from dampness and sunlight with a tarpaulin. Do not place units directly onto green concrete slabs or near pooling water.

- Avoid covering the units with polythene as this can create a humid environment.

- Do not rack window and door frames out of square. Units that have projecting sills or have the hardware fitted should have spacers between them to support the frames and avoid damage.

- Keep wet cement, mortar and brick cleaning acid away from timber before, during and after installation. If accidentally splashed, wash off immediately with clean water. If removal is delayed and scraping becomes necessary, the surface finish may suffer. Protect the windows and doors from nearby welding, painting or plastering or from loose or windblown debris and dust.

INSTALLATION

- Before, during and after installation do not stand on the windows or doors, or use them as a support for scaffolding, or slide material through the frames.
- Allow for the lifting capacity available on site to match the unit's weight and location. Units can easily be heavier than two people can safely carry/lift.
- Windows and doors are non-load bearing. The dead weight and live loads generated by the windows and doors must be transferred to and carried by the supporting frame. In turn, this frame has to be designed to carry the load without undue deflection. Loads from top-hung units, such as bi-folds, can be substantial.

FORMING THE OPENING

The opening has to provide a tolerance for movement and settlement

- Once installed, the heads should be straight and non-load bearing. Guidance on minimum allowances is given in the table below.

	Height	Width
Internal	Unit + 15mm	Unit + 15mm
External	Unit + 20mm	Unit + 20mm

- Check that the opening is square, has straight sides and is without twist.
- Allow additional clearance to compensate for skew or hourglass openings, bows in the floor or sags in the lintel. If installing sliding or bi-folding units and the bottom of the opening is uneven, level it.

Prepare the joinery for installation

- Check the size and confirm that it will fit into the opening. Vary the opening before considering any changes to the joinery. The unit should be square, with temporary braces fitted. Remove spare keys and store them in a safe place. Keep the sash and doors closed.
- Any unpainted surfaces of the joinery should be sealed, especially surfaces inaccessible after installation. If any element has to be trimmed, any exposed edge must be treated with a compatible preservative and re-coated with primer or stain.

WEATHERPROOFING

- Fasten the wrap, overlapping and sealing the joints with foil tape to form an air-tight layer.
- Cut the wrap or sarking at the openings in an inverted "Y" pattern. Fold the edges around the jamb studs and sill trimmers and fix them to the frame. Use foil tape to seal the bottom corners. Alternatively, cut, fold and position trimming pieces around the jamb studs and sill trimmers. Tape these to the foil or sarking to form a continuous layer around the opening.

FLASHINGS

- Install the head flashing above the window and the sill flashing under the window.
- Slit the sarking or foil layer 150mm vertically above each jamb stud. Run the flashing across the head of the opening, extending 150mm past the side of the opening. Tape the top of the flashing to the lintel and sarking. It should remain free to hinge until after the window is installed.
- Position the sill flashing and return it vertically at least 10mm at the back of the sill, or into a sill groove. Extend it far enough to shed water to the outside of the cladding, and at least 20mm up each side of the frame.

INSTALLING WINDOWS AND PRE-HUNG DOORS

There are several methods of installing a joinery unit. The method described here involves fitting a continuous fixing angle, such as 50x50x1.2mm galvanised steel or similar aluminium angle to the side of each jamb, and, if the cladding allows, the head of the unit. The angle also acts as the side flashing.

Check that the unit is ready to install

The opening should be square and of sufficient size. Sarking should be fitted, head and sill flashing prepared and in place, and the units primed and squared.

Position sill packers to support the units adequately

Generally support the sill on impervious packers at a maximum of 150mm from each jamb, directly underneath each mullion and at a maximum of 450mm between, preferably directly over studs. Level the tops of the packers along the opening. Fully support the sill for sliding and bi-folding units.

Install the jamb fixing angles

Calculate the position where the sides of the unit lines up with the outside face of the wall frame. Mark this location as a line on the side of each jamb. Apply a bead of sealant and fix the fixing angles. Screw fix at 450 mm centres. A head angle can also be installed, if this does not foul the head flashing detail.

Carefully position the unit in the opening

- Pack it square and plumb, with the sill level and jambs vertical. The jamb fixing angles should be tight up against the wall frame, and the head and sill flashing free. The unit should have uniform clearance all around, and be in the correct position, parallel to the inside wall face. The weight of the lintels or arch bears should not be bearing on the frames.

- Check that the unit is not twisted. If installed with a twist, the sashes and leaves will not sit evenly in the frame.

- Fit side packers between the unit and the frame a maximum of 100mm from the sill and the head, and in the centre of the unit at a maximum 600mm spacing. Packers should be snug but not distort the unit. Do not install head packers, unless specified. When fitted, check the unit's operation prior to fixing. With tracked units, check the head and sill tracks are level, without bow or sag.

FIXING

Starting at a maximum of 100mm from each end, nail through the jamb fixing angles into the jamb studs at a maximum 450mm centres. For top-hung sliding and bi-fold units, fix the head to the lintel strictly in accordance with our recommendation.

Fixed units over 1800mm wide with a 'sliding' fixing at the head

Head fixing should be installed so that they provide lateral support but not vertical loads. Back fix screws into the joinery wherever possible. Fixings should be hot dip galvanised, stainless steel or silicone bronze. Do not use uncoated steel fixings on any part of the unit.

Checking operation after fixing

Sash should be wound in and out. If the sash binds on either stile or mullion, packers should be adjusted under sill until sash moves freely. After installation remove racking braces where fitted.

SEALING EXTERNAL JOINERY TO THE FRAME

To prevent air infiltration, seal the gap between the window or door frame and wall frame. Seal the edges of the fixing angle to the sarking or foil with tape. Fill under the sill or the remaining parts of perimeter with a polythene backed sealing strip or a backer rod and caulking. Dress the head flashing around the unit and tape it to the wrap, ensuring an air and waterproof finish.

Do not leave thermal bridges between the interior and exterior

Carefully insulate the space between the joinery and wall frame. Pack it from the inside with mineral wool insulation. This will expand to fill the gap. Alternately, fill the gap with low pressure polyurethane insulating foam. Do not use high-pressure expanding foams as they can distort the frame.

Figure 1 Installation sequence for brick veneer

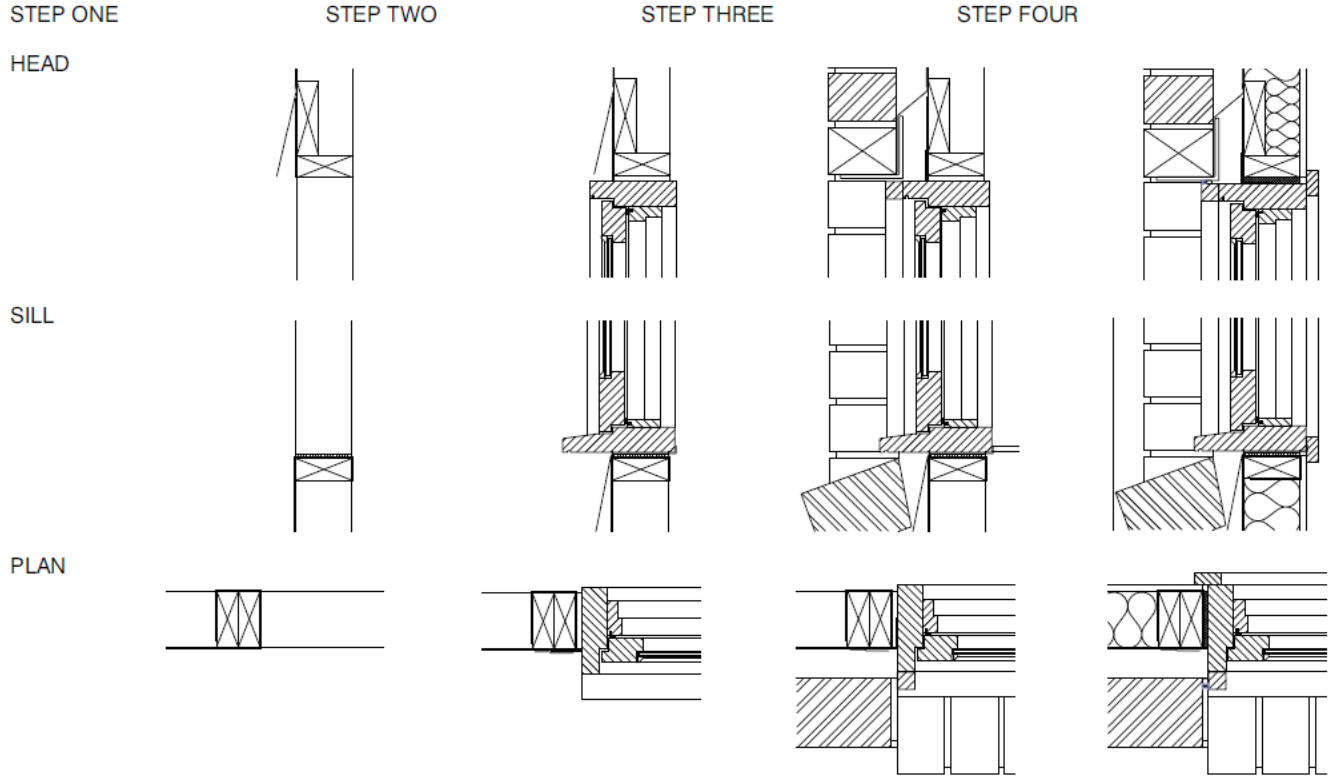

Figure 2 Installation sequence for weatherboards

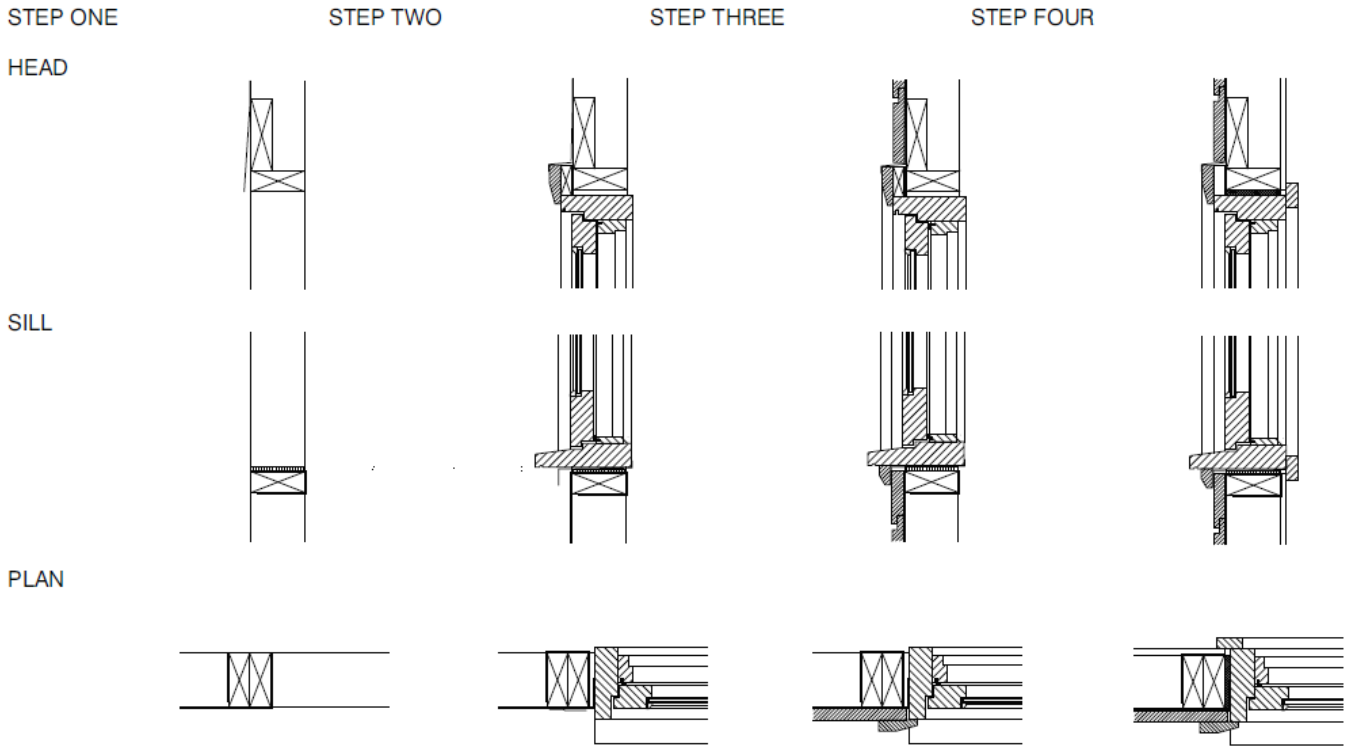

Figure 3 Window and Flashing with Wrap

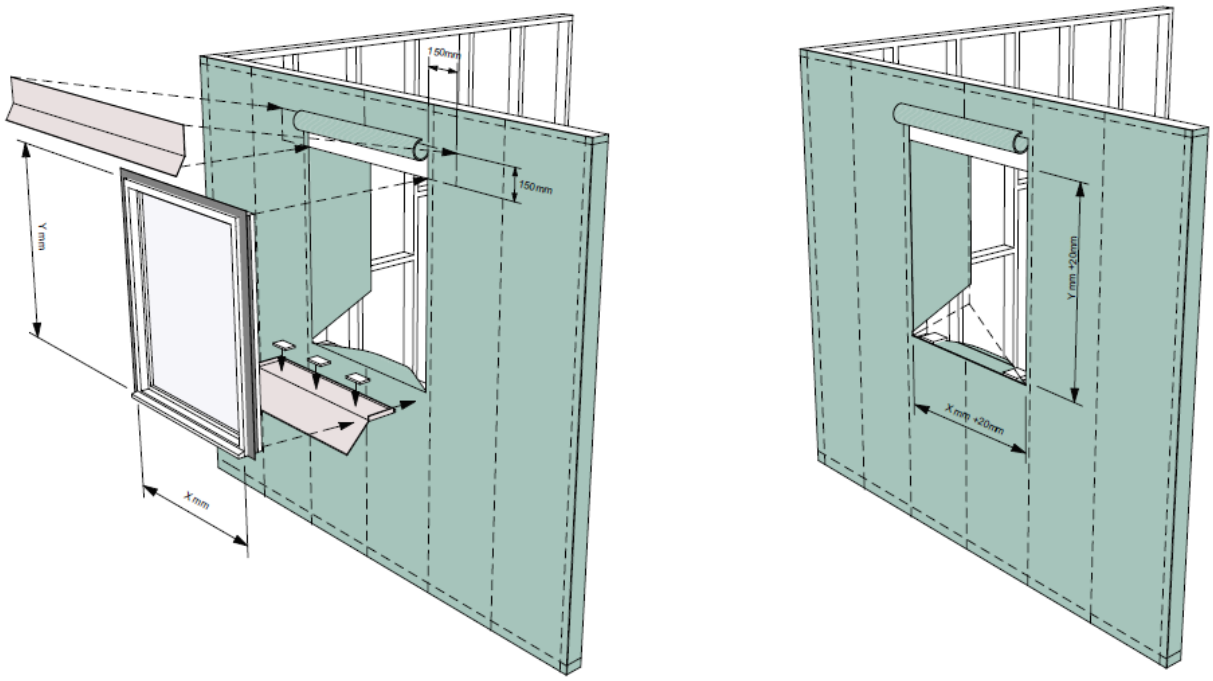

Figure 4 Door and Flashing with Wrap

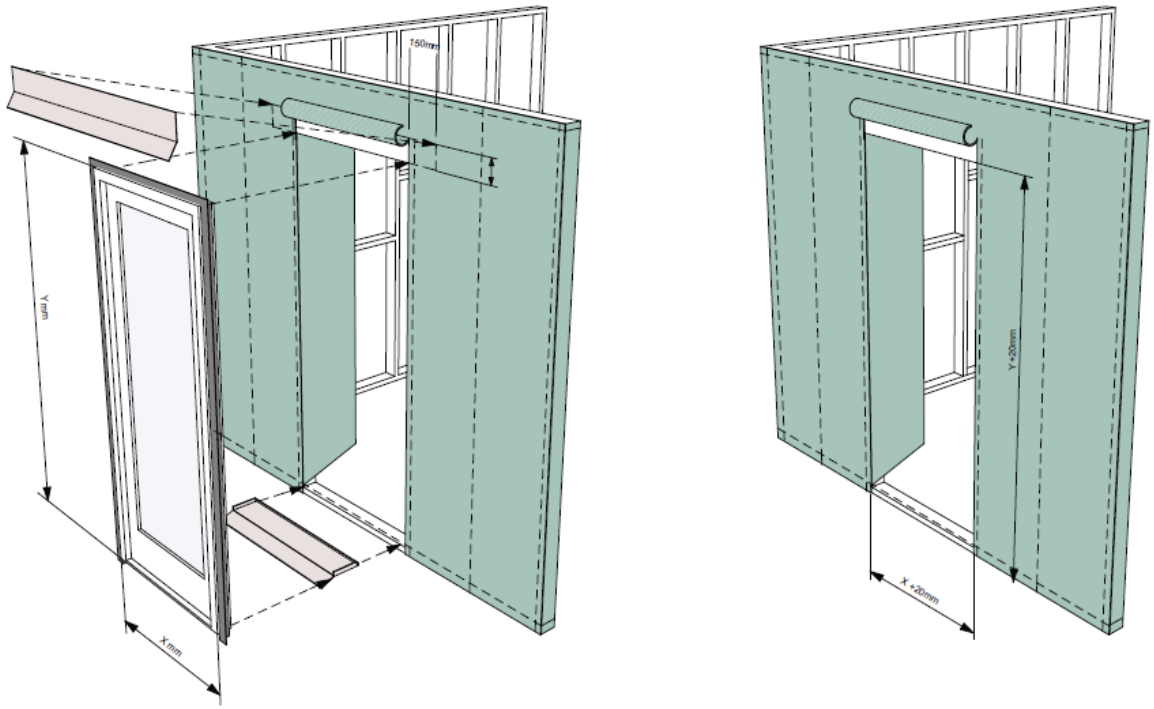

FITTING INTERNAL AND EXTERNAL LININGS

Re-check that the sill and head are straight and level before fixing architraves

Frame head clearance should be a minimum of 10mm. Plaster head and stile clearance should be a minimum of 6mm. Do not directly tile or concrete up to the sill. Maintain at least a 5mm expansion gap.

The edge of the external cladding should allow room of a seal or a weather strip

- Insert a backer rod into the gap so that it finishes at least 12mm clear of the external face of the unit and caulk. A timber weather strip or storm mould fixed to the exposed face of the frame. This should have a drainage space behind it to drain any moisture away and not be sealed at the base.
- Allow a minimum of 10mm clearance between the unit sill and external sill bricks.

FINISHING ALL JOINERY

- Re-prime any unit immediately if the primer coat is removed during installation.
- Timber products should be sealed with 2 coats to all faces and edges within 30 days of delivery. See Finishes guide.
- Factory finished windows should be checked for any on-site damage to the finish and any small areas made good.

PROTECTION

- Protect the installed joinery with plastic or cardboard. Avoid splattering with mortar, concrete, render and other objects that can damage the unit during construction.
- With pre-finished and pre-glazed windows the manufacturers protection should be left in place unless its removal is necessary.
- Do not stand in the windows or doors, or use them as supports for scaffolding. If a door must be used for access, build a protective cover to protect the joinery.
- Protect sliding or bi-folding tracks and all window and door sills from planks, scaffolding and wheelbarrows. Keep the tracks of sliding and bi-folding doors and windows clear of sand and cement.

INSTALLING A HINGED DOOR

Position and tolerances

- Doors supplied hung in a frame should be installed as described above, except that internal doors do not require flashing. A joinery door can be hung in a frame assembled on site.

- Determine the swing direction, the hinged side of the door and the number of hinges. Standard height doors should have three hinges per door. Doors taller than 2040mm high should have four hinges.

Ensure the door fits the frame, and both fit the opening

- The door generally requires an even 3mm clearance between the leaf and the frame on all sides. So, the size of the opening in the door frame should be 6mm larger in each direction than the door.

- If required, trim the door evenly on each face to fit the frame. Avoid trimming more than 10mm from any edge of the joinery. Doors to be painted require slightly more clearance. Doors that are to be on extended butt hinges require more clearance to allow for its opening swing. Both the door and the frame should be square.

Fit the frame to the opening

- Generally follow the guidelines above. Ensure that the frame is flat without twist. Back fix screws into the joinery wherever possible. Avoid back-nailing as it will deform the frame. Where back-fixing is not possible, fix on the line of any floating stops.

- Fixing for any external doors should be hot dip galvanised steel in accordance with service condition No.2 of AS 1789, stainless steel in accordance with AS 1449, or silicone bronze. Do not use uncoated steel fixings on any part of an external unit.

Fixing hinges to the door

- Fit the selected hinges to the door. With butt hinges, one leaf of the hinge is set into the jamb while the other is set into mortise in the door. The width of the hinge has to be chosen to ensure the door opens clear of any surrounding jamb or other impediments.

- The top and bottom hinges should be positioned an equal distance in from the top or bottom of the door, ideally between 75mm and 150mm from the outside edge of the door to the outside edge of the hinge. Additional hinges should be evenly spaced between these two.

- For butt hinges, set the hinge into the wood of the door so that it is flush when fixed to the door. Fit off all hinges.

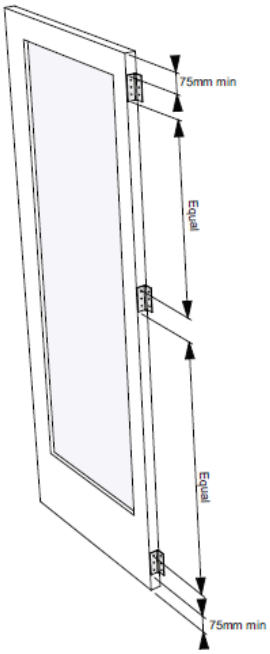

Figure 5 Hinge positions on a door

Fixing hinges to the jamb

- Accurately measure the distance from the top of the door to the top edge of each hinge. Add 3mm to each measurement and mark these distances carefully on the door jamb. Each mark is the top of the hinges on the door. The 3mm provides the clearance at the top of the door.
- Rebate the jamb to accept the hinges so that they finish flush when fixed.
- Stand the door perpendicular to the door opening with the hinges close to the rebated jamb. Propping under the door with a wedge, fit the top hinge with one screw, before fixing the bottom hinge then the intermediate hinges each with only one screw.
- Check the swing of the door, ensuring it has an even clearance on the top and sides, and a suitable clearance at the bottom. Adjust the hinge or screw positions as necessary before installing the remainder of the screws.
- Check the door again. If the jamb has floating stops, the door stop bead is fitted to the line of the door to allow a soft close.

FINISHING

FINISHING ONSITE – EXTERNAL UNITS

Overview of finishes

The main options for finishing windows and doors are uncoated or natural wood, a transparent coating or stain finish, or painted. The options can also be mixed. For example, the frame can be painted while the sashes are clear coated. The requirements for finishes vary. Also, the performance of finishes formulations varies between products and brands. For extended durability and service life, only use quality paint or 'high build' strains.

Uncoated windows and doors

- The natural wood or timber doors and windows units can be left uncoated and allowed to weather. However, this is only suitable in some circumstances and only when the ramifications are recognised.
- Uncoated timber weathers with exposure to sunlight and rain and turns grey. Uneven exposure and wetting can lead to variable staining and bleaching and localised mould growth. With a suitable Durability Class 1 or 2 species in a sheltered or controlled location, this can nevertheless provide an appealing and low maintenance solution, especially for environmentally aware clients.
- However, poor species selection and detailing or exposing high durability species to aggressive conditions without protection can shorten the service life of the unit and disappoint clients. If the joinery is to be left uncoated, examine a range of timber structures near the project site and note weathering and species performance. Select the species and detailing accordingly.

Transparent coatings and stains

Transparent coatings and stains protect the timber while allowing the grain and texture of the wood to show through. They usually combine some or all of the preservatives, fungicides and colourants with an oil that soaks into the wood and provide a tougher surface coating. While these coatings shed water and reduce other impacts, the surface of the wood can still weather and the surface crack or peel if the finish is exposed to sunlight over time. These coatings require maintenance every 12 months to 2 years.

Paints

- Paints form an opaque coating over the surface of the wood, generally protecting the frame from water, sunlight and abrasion. As the timber slowly expands and contracts with changes in moisture content, the paint needs to be flexible and resist the effects of sunlight that tend to reduce its flexibility over time. When paints become hard and brittle they can breakdown and flake away from the wood. Paint's flexibility and resistance to breakdown is usually directly related to the quality of the product and of the installation. They require maintenance every 7-10 years.

- The choice of colour is important for durability as well as for visual appeal. Generally, light coloured paints will last longer and give greater protection to the timber than dark coloured paints (which can void our warranty if used). Dark colours absorb and retain heat from sunlight more readily than light colours. This increases the temperature and stresses in the coating and the underlying wood, and increases the wood's decay rate. Consider the use of Accoya for items requiring a dark finish.

DEALING WITH SITE FINISHED UNITS

- Confirm the specified finish and the state of the joinery at delivery.
- Window and door joinery is supplied to site in varying conditions and as specified on the quote.
- Check the coating that has already been applied in the factory. The units may have been supplied as raw wood, in which case a coating of water repellent will have been applied.
- Other selected finishes could be primed (white) or first coat of Cutek CD50 Oil or Intergrain Ultradeck.

Protect frames and units at all times

- Uncoated, raw wood frames deteriorate very quickly on site. Even those with a water repellent or first coat oil are susceptible to damage that will affect the long-term performance of subsequent coats. Applying a priming or base coat to uncoated units as soon as possible after delivery to site is highly recommended if they are to be stored onsite for any period of time.
- Any unpainted surfaces should be sealed with a good quality compatible primer or sealer as soon as possible, especially surfaces that will not be accessible after installation. Glazing rebates and backs of beads should also be sealed. Windows with factory applied primer should have at least one of the finishing coats applied before installation and preferable within 30 days of delivery.

Use quality paints and coatings to the manufacturer's recommendations

- The expected life of paint or other finishes depends on the quality of the coatings and the care taken in application.
- Good quality finishes increase the service life of the unit.
- Ensure compatibility between coats. Use the specified finish and do not mix brands.

Prepare a safe, dry, clean and well-ventilated area for painting

Finishing should be carried out in dry weather when the temperatures are suitable. Generally do not apply external finishes on frosty mornings, before rain or in hot sunlight.

Before the first coats, prepare the surface of the joinery carefully

- Coatings bond to properly prepared timber surfaces more effectively.

- Fill nail recesses, lightly sand and clean the timbers immediately prior to painting.
- Remove dust particles with a soft dry rag including the corners.
- Do not use steel wool on an external unit.

Only paint the timber surfaces – don't paint the tracks or seals

- Locks, handles, seals and other loose hardware should be removed if possible before the unit is painted.
- Store the removed items safely in numbered plastic bags.
- Do not paint balancer ropes, weather-stripping, silicon beads or other moving parts.

Refinish any newly cut or trimmed areas

If any element has to be trimmed in preparation for installation, immediately treat any exposed edge with a compatible preservative and recoat with the required primer or stain.

Ensure primer surfaces and edges are in good condition before applying finishing coats

- Primed products need to be lightly sanded before the undercoat and top coats are applied.
- If the primer or base coat stain has deteriorated, it should be recoated before further finishing coats are applied.

Filling for clear finishes

- Do not fill nail holes etc. until after the first coat is applied as the filer can make an unsightly smear that will be trapped under the finish and not easily removed.
- Stop holes after the first coat of sealer with an oil based putty that is darker than the original timber.
- Repeat the sealing and sanding process until a smooth even finish is achieved.
- All smoothing and preparation should be done at the priming/sealing stage as the top coats do not need to be sanded.

MAINTAINING

CLEANING

Wash the windows, doors and glass regularly with a mild detergent solution or cleaner

Wash the timber work with a water spray and wipe them with a clean, damp cloth and mild detergent solution at least 2 or 3 times a year. Rinse off with clean water. Keep the cloth free of grit. Clean the glass with a water spray followed by glass cleaner. Remove the water carefully with a rubber fin or soft, lint-free cloth.

Remove any built up dirt and grime, especially in coastal or high pollution areas

- Wash the units regularly enough to eliminate obvious dirt or salt build ups. Check the corners and returns of the sashes and frames and clean away accumulated deposits with an old tooth brush.
- Avoid damaging the finishes and glass during cleaning. Don't use razor blades, petroleum based cleaners or solvents on the sashes, doors or glass.
- If fitted, brassware is usually polished and clear lacquered and only requires dusting with a soft cloth and occasional application of a good quality furniture polish. Do not use abrasive metal polishes. They will remove the lacquer and can scratch the metal.
- Glass should not be cleaned when it is very hot or in direct mid-summer sunlight as extreme temperature changes can cause the glass to crack.

Carefully clean tracks and weep holes

- Dirt on the roller tracks can cause premature wear and damage. Vacuum the bottom tracks to remove dust and grit, and wipe them with a soft cloth to remove any build-up.
- Some windows and doors include weep holes that drain wind-driven rain and water than accumulates on the sill or behind the track. Keep these clean and clear of dirt.

REGULAR MAINTENANCE

Lubricate the hardware and moving parts regularly

- If necessary, lubricate the bottom track with a dry silica based lubricant. Avoid oil based lubricants as these can capture dirt.
- Lightly grease the top tracks, and oil hinges, handles and locks as required. Hardware in coastal or high pollution areas require regular lubrication.

Ensure seals are in place and performing efficiently

Check and clean the seals around the sashes and doors. Compression seals will lose elasticity and become less efficient with age and exposure. If they become rigid, cracked or broken, they should be replaced with seals of similar dimension and at least equal performance.

Regular inspections of your windows and doors

- Windows and doors fully exposed to the sunlight or weather, especially coastal winds, will need more frequent maintenance than those more protected from the weather.
- Paint and other finishes generally fail first on the leading top edge of the sill or the top face of the bottom element of sashes or door leaves. Look for signs of surface splits or discolouration, especially on the corners and edges.
- Look for cracks between frame elements and gaps between the beading and glass. These can trap water in the joints.
- Check for signs of decay, such as softness in the wood, particularly in the corners and returns.
- Corrosion in the fasteners often shows up as a rusty red stain seeping through the paint.
- Poorly performing hardware is a nuisance and can cause further damage to the unit. If handles, locks or hinges fail or are damaged they can easily be replaced or refitted on the existing unit.

FINISHES AND COATINGS

- Use quality paints and coatings and maintain them properly. These things protect your joinery.
- Recoating should take place before the existing finish has deteriorated to the extent that bare wood is exposed. A poorly maintained paint film can accelerate decay.
- Water can enter the gaps between the paint and timber or the joints between the glass and the timber and become trapped.
- Recoat the finish before splits form or the paint peels.
- Modern paints and finishes generally do not require cutting back to the primer before fresh coats are applied. If the finish is intact, wash it with a detergent, lightly sand and then apply a fresh coat.
- Cracked areas should be sanded back to sound material. If the wood is exposed and grey, the surface should be sanded back to fresh wood. Grey weathered surfaces will not hold paint or other coatings properly and they will fail quickly.
- Ensure any new finish is compatible with previous coatings or they may not adhere to the surface and will crack and peel off quickly. Prior to any recoating, consult the suppliers of the original finish or a reputable paint supplier for advice.

GLASS AND GLAZING

- Toughened glass scratches easily. Also, insulating, low-e or heat reflective glasses may have special coatings that require specific maintenance. Check with supplier.
- Don't remove decals, manifestation or other safety markers on the glass. Many significant accidents are caused by people running into large glass doors or windows, especially children. Decals and other markings help limit unnecessary injury.
- Treat broken glass in a window with care. Always cover the damaged area for safety and cover the floors to avoid damage from falling glass. Then consult a qualified glazier.
- When replacing glass don't compromise performance or safety. The original glass was selected for a particular energy performance and safety rating. Any replacement glass should maintain the energy performance and at least match the current safety ratings for a new window.
- Replacing the glass may not always be possible and replacing the sash may be necessary. Both silicone sealing and security glazing tapes probably have sufficient adhesion to make removal difficult without breaking the glass and damaging the frame. It may be easier and more economical to replace the entire sash.

TIMBER ELEMENTS

- Caulk or seal any gaps. Gaps in joints or around the beading can allow water to enter, encouraging corrosion and decay.
- These gaps need to be carefully cleaned out and any build up of paint or dirt removed with a blade or fine sharp chisel until a clean timber edge is exposed.
- Seal the top of the gap neatly with a flexible and paintable caulking compound, avoiding filling the gap completely. When it has cured, trim and repaint the joint.
- Cut out any decayed or damaged timber sections and splice matching timber into the gap. Patches used to repair damaged timber should match the existing timber species, have the grain running the same way and have the same profile.
- With clear finished work select patches of a similar grain and colour. When joining new timber into existing timber, splice members together to provide a maximum area for fixing. Fix with timber dowel or non-ferrous pins.
- Where the timber has deteriorated and joints have decayed the repair of the timber element could requite re-fitting parts of the frame that are beyond a simple handyman task. Discuss replacement with a suitable joiner.

Against the grain
Windows & Doors

T 02 4782 3210

www.**againstthegrainwindows**.com.au info@againstthegrain.net.au

24/26 Megalong Street, Katoomba

Add the craftsman's touch to your home!

WADIC
Window And Door Industry Council